FC6535 GrowFrame/30 RAISED BED 120x120 EXTENSION

FC2030	2 pcs.
FC2218	2 pcs.
FC2221	2 pcs.
FC2225	2 pcs.
FC2326	2 pcs.
FC2416	1 pcs.
FC2222	2 pcs.

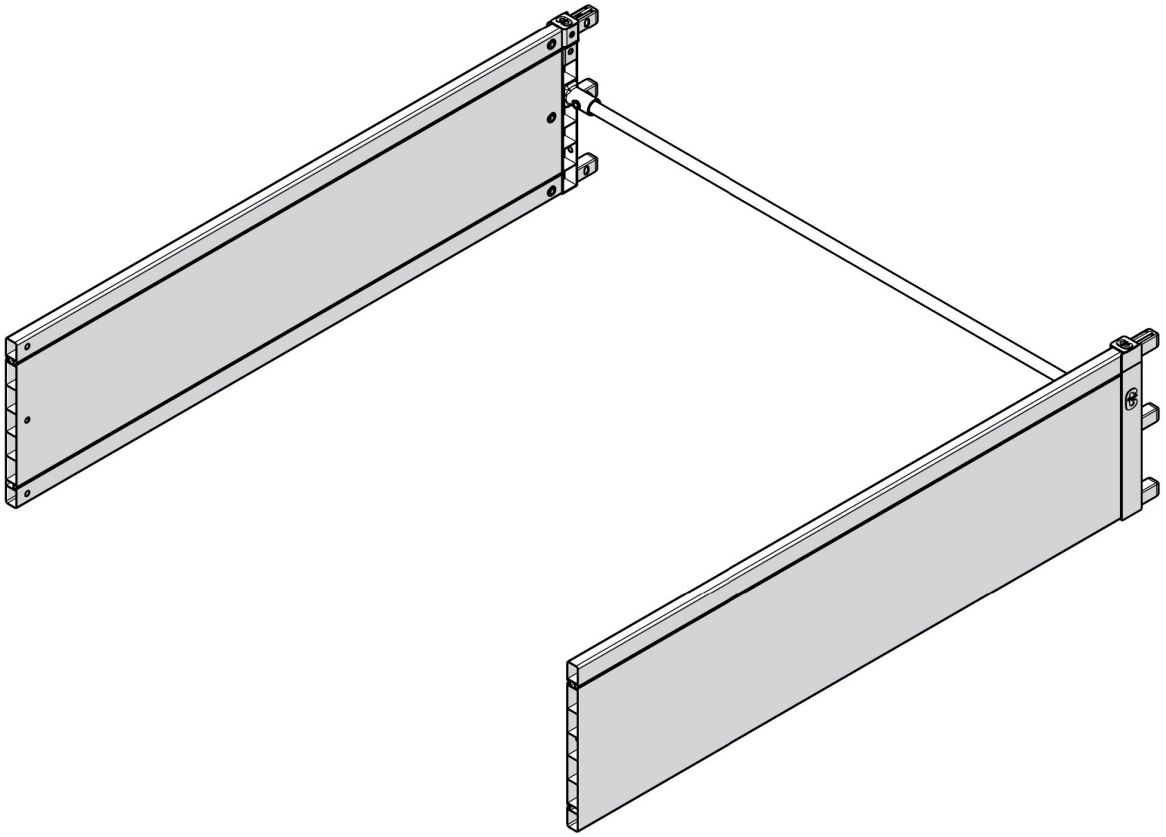

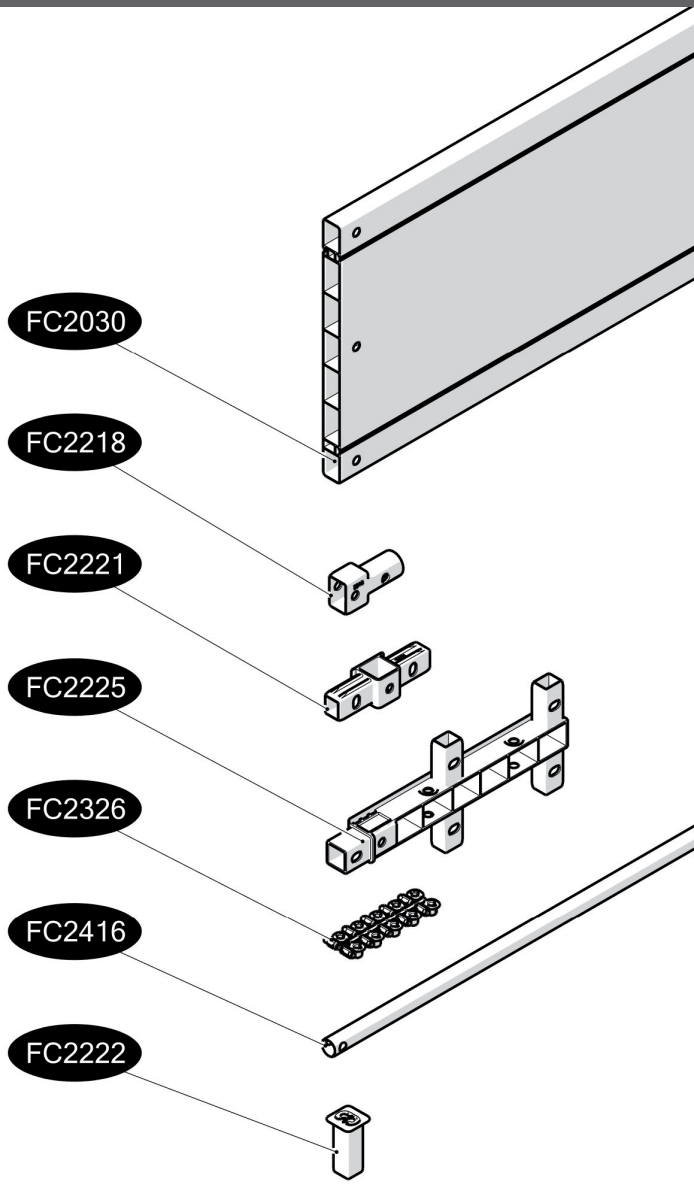

www.growcamp.dk
info@growcamp.dk

1 FC6535 GrowFrame/30 RAISED BED 120x120 EXTENSION

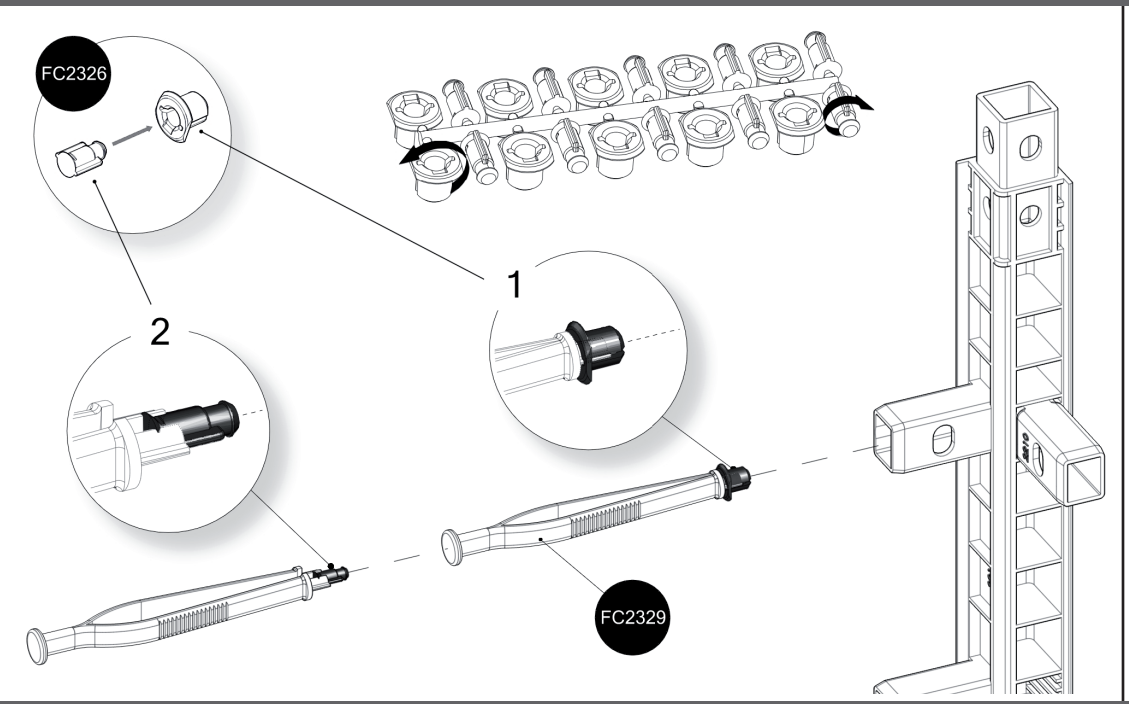

2

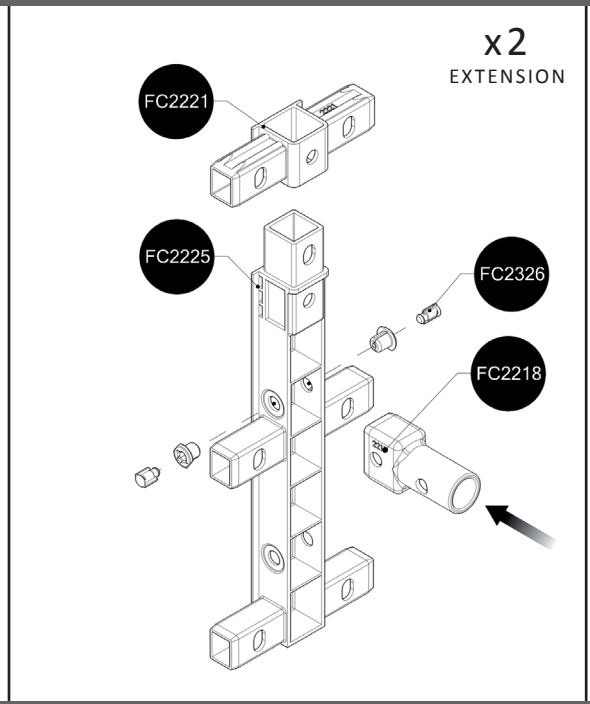

3

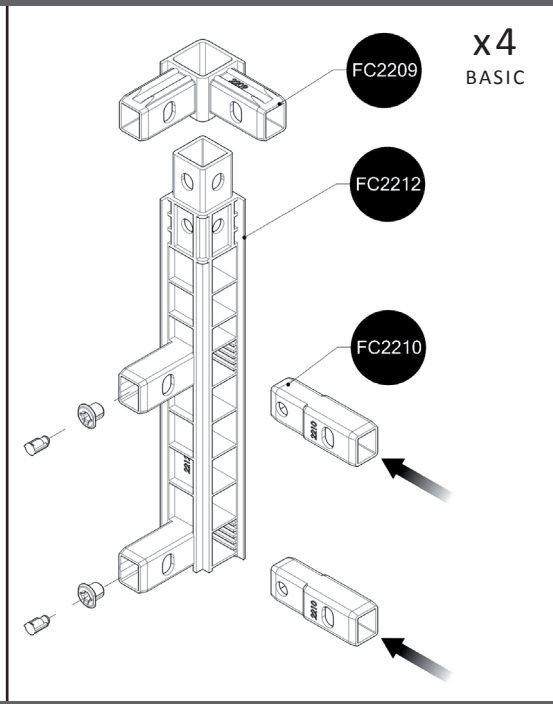

4

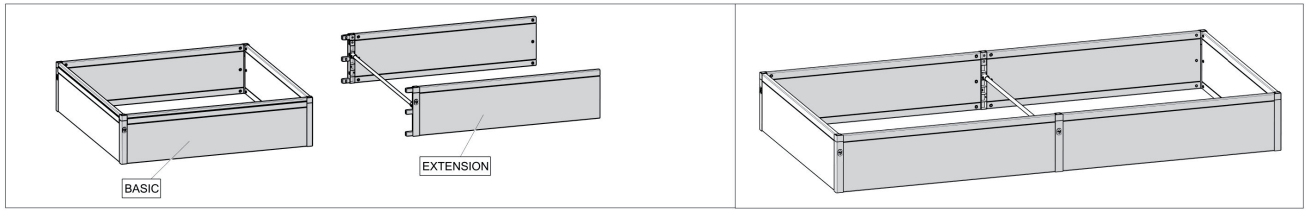

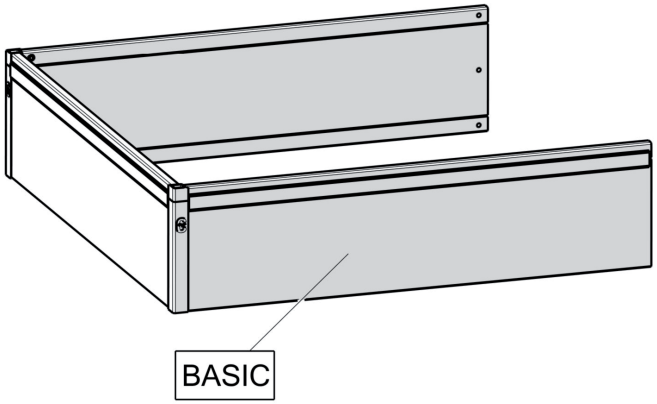

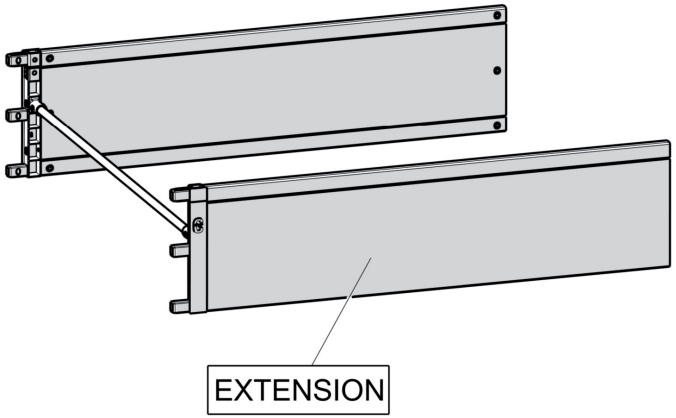

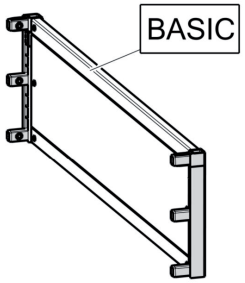
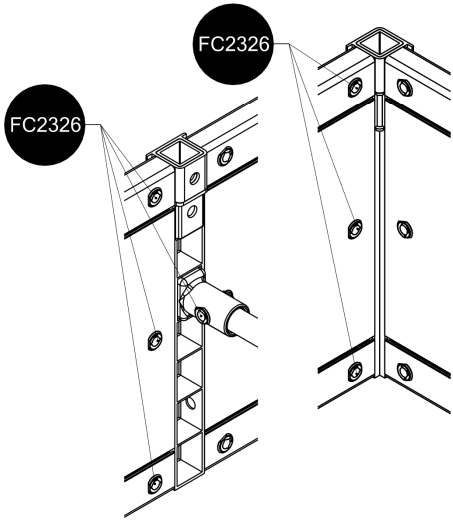
5